© Dimond 2018, all rights reserved. The information and specifications contained in this document are proprietary to Dimond and may not be used other than for the purpose of designing or building a roof or roofing system solely using products supplied or approved by Dimond ("Permitted Purpose"). You may copy this document solely for the Permitted Purpose, but may not otherwise copy, publish, distribute or modify this document without Dimond's prior written consent. Dimond will not be liable for any use of this document or the information and specifications contained in this document, other than for the Permitted Purpose.

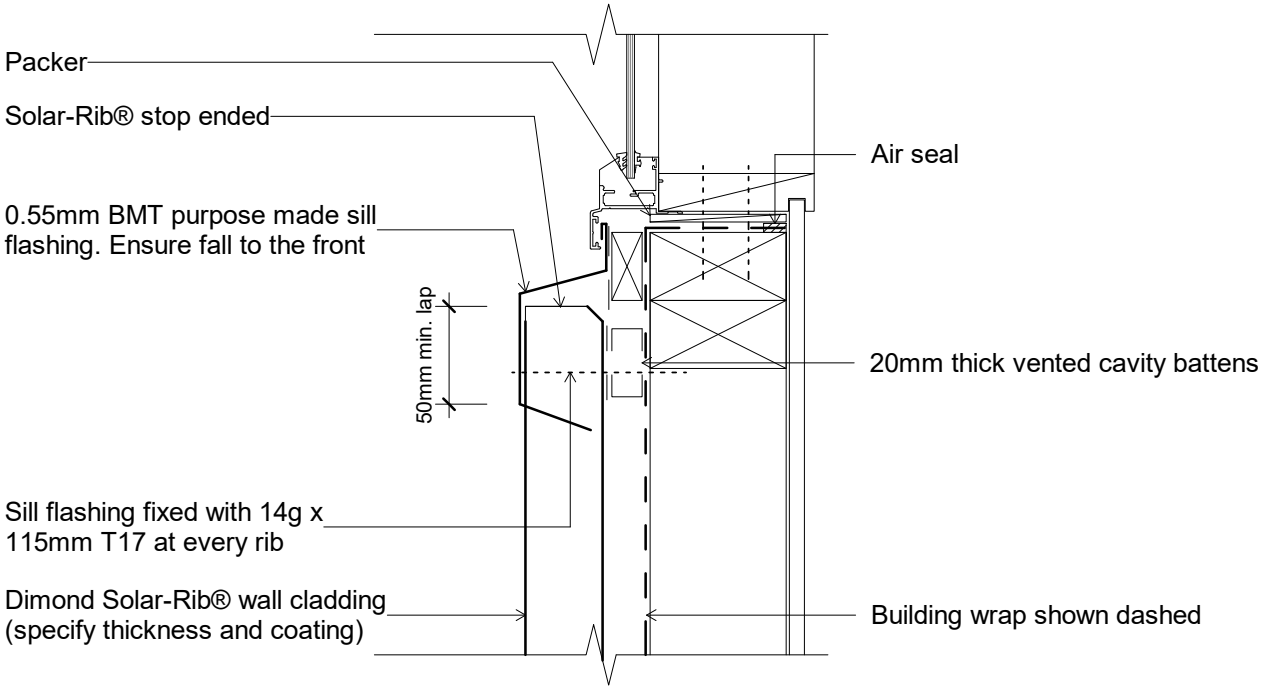

Notes:
-Where CCA or ACQ treated cavity battens are installed a barrier between the batten and the cladding is required.

Original Size A4

Dimond Roofing

Solar Rib

Wall

Vertical Cladding with Cavity Window Detail - Sill

dim_sor_2061 Vertical Cladding with Cavity Window Detail - Sill	
Issue: 02	
Scale: 1 : 5	Reference
Date: 10 June 2019	dim_sor_2061