ADVANCED NON-VENTED

COMMERCIAL VERTICAL WALL CLADDING

DETAILS:		REV:	DATE:
DARS_ANV_CC_00	Cover Sheet	1	July 2026
DARS_ANV_CC_01	Typical Buildup	1	July 2026
DARS_ANV_CC_02	Barge Detail	1	July 2026
DARS_ANV_CC_03	Wall to Roof Transverse Detail	1	July 2026
DARS_ANV_CC_04	Wall to Roof Detail	1	July 2026
DARS_ANV_CC_05	Box Gutter Detail	1	July 2026
DARS_ANV_CC_06	Wall to Roof Apex Detail	1	July 2026
DARS_ANV_CC_07	External Corner Detail	1	July 2026
DARS_ANV_CC_08	Internal Corner Detail	1	July 2026
DARS_ANV_CC_09	Base Detail	1	July 2026
DARS_ANV_CC_10	Window/Door Head Detail	1	July 2026
DARS_ANV_CC_11	Window/Door Jamb Detail	1	July 2026
DARS_ANV_CC_12	Window Sill Detail	1	July 2026
DARS_ANV_CC_13	Pipe Penetration Detail	1	July 2026
DARS_ANV_CC_14	Roller Door Head Detail	1	July 2026
DARS_ANV_CC_15	Roller Door Jamb Detail	1	July 2026
DARS_ANV_CC_16	Square Penetration Head and Sil Details	1	July 2026
DARS_ANV_CC_17	Square Penetration Jamb Detail	1	July 2026

Drawing Version: 1

Dimond Roofing®

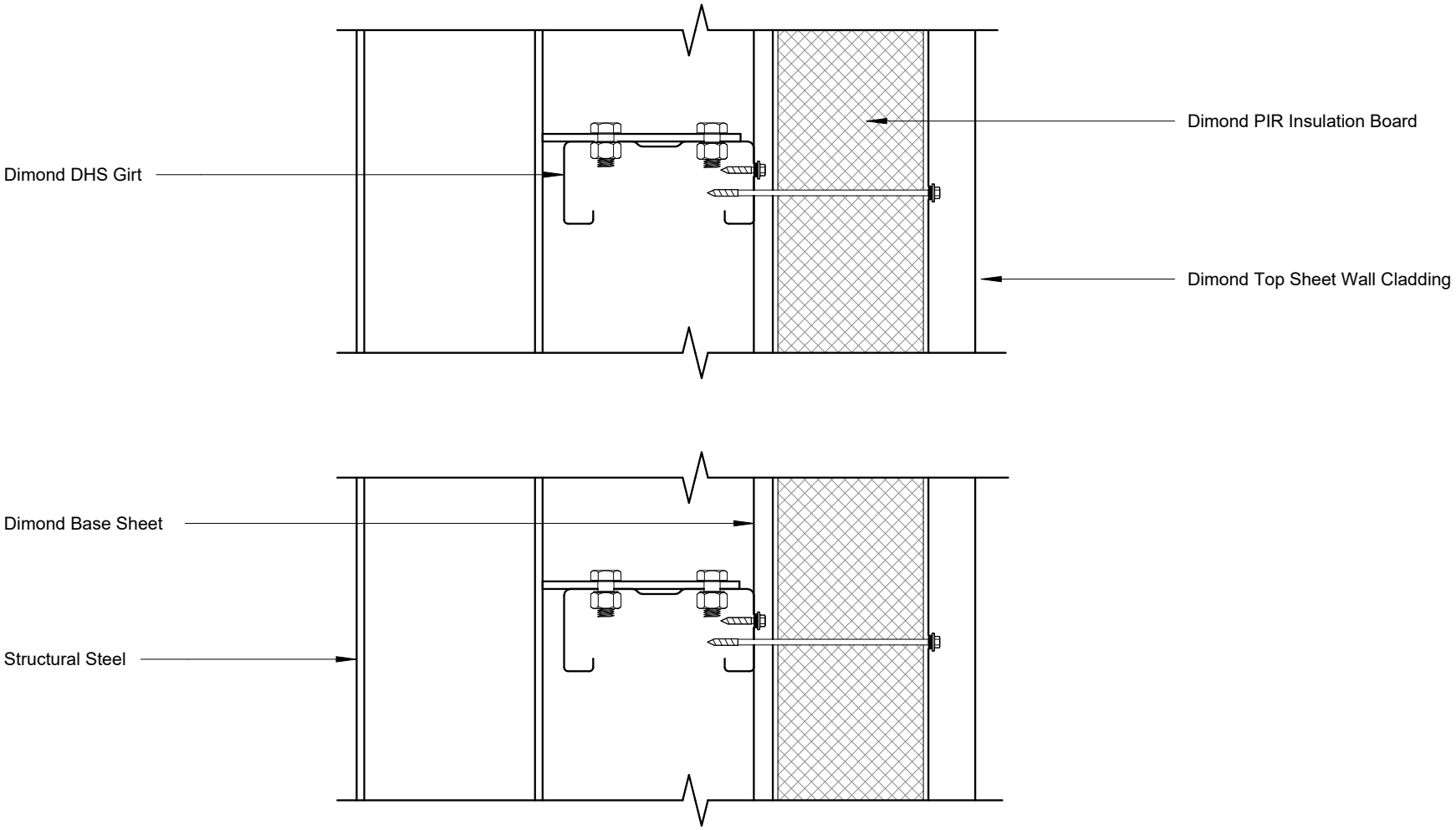

Typical Buildup

Rev: 1 **Advanced Non-Vented Commerical Cladding**

Dimond Roofing®

©Dimond 2023, all rights reserved. The information and specifications contained in this document are proprietary to Dimond and may not be used other than for the purpose of designing or building a roof or roofing system solely using products supplied or approved by Dimond ("Permitted Purpose"). You may copy this document solely for the Permitted Purpose, but may not otherwise copy, publish, distribute or modify this document without Dimond's prior written consent. Dimond will not be liable for any use of this document or information and specifications contained in this document, other than for the Permitted Purpose

Date: July 2026 Scale: 1 : 5 Sheet: **DARS_ANV_CC_01**

	COVER DIMENSIONS AS PER E2/AS1		
	SITUATION 1 Low, Meduim & High Wind Zones where roof pitch ≥ 10° **(Excludes any soft edge or turn-down)**	**SITUATION 2** All roof pitches in Very High zone. Low, Meduim & High Wind Zones where roof pitch ≤10° **(Excludes any soft edge or turn-down)**	**SITUATION 3** All roof pitches in Extra High wind zone **(Excludes any soft edge or turn-down)**
X	130mm MIN	200mm MIN	200mm MIN
Y	Cover at least two ribs (turned-up edge to full rib height constitutes a rib)		
Z	50mm MIN	70mm MIN	90mm MIN

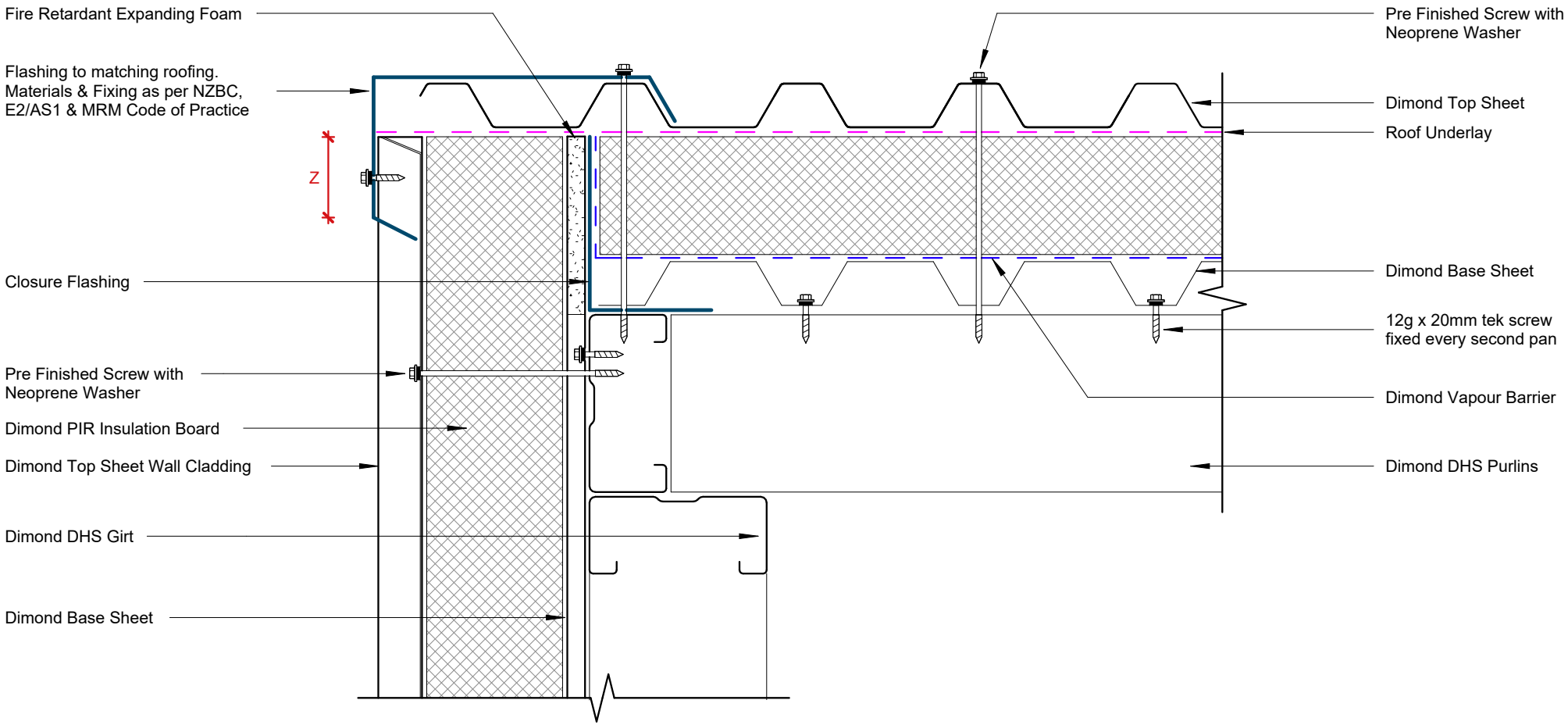

Barge Detail

Rev: 1 **Advanced Non-Vented Commerical Cladding**

Date: July 2026 Scale: 1 : 5 Sheet: **DARS_ANV_CC_02**

Dimond Roofing®

©Dimond 2023, all rights reserved. The information and specifications contained in this document are proprietary to Dimond and may not be used other than for the purpose of designing or building a roof or roofing system solely using products supplied or approved by Dimond ("Permitted Purpose"). You may copy this document solely for the Permitted Purpose, but may not otherwise copy, publish, distribute or modify this document without Dimond's prior written consent. Dimond will not be liable for any use of this document or information and specifications contained in this document, other than for the Permitted Purpose

	COVER DIMENSIONS AS PER E2/AS1		
	SITUATION 1 Low, Meduim & High Wind Zones where roof pitch ≥ 10° **(Excludes any soft edge or turn-down)**	**SITUATION 2** All roof pitches in Very High zone. Low, Meduim & High Wind Zones where roof pitch ≤10° **(Excludes any soft edge or turn-down)**	**SITUATION 3** All roof pitches in Extra High wind zone **(Excludes any soft edge or turn-down)**
X	130mm MIN	200mm MIN	200mm MIN
Y	Cover at least two ribs (turned-up edge to full rib height constitutes a rib)		
Z	50mm MIN	70mm MIN	90mm MIN

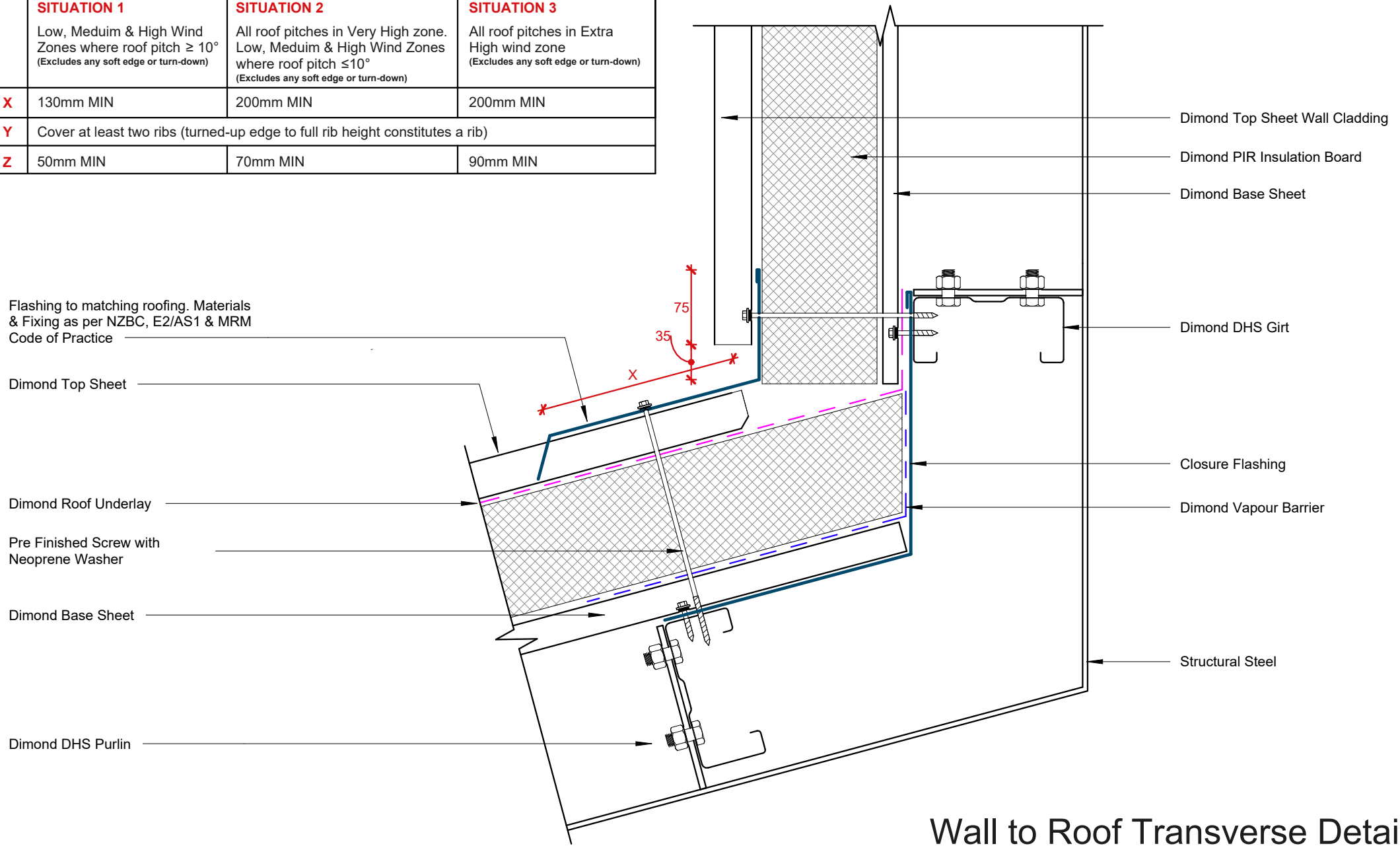

Wall to Roof Transverse Detail

Rev: 1 **Advanced Non-Vented Commerical Cladding**

Date: July 2026 Scale: 1 : 5 Sheet: **DARS_ANV_CC_03**

Dimond Roofing®

©Dimond 2023, all rights reserved. The information and specifications contained in this document are proprietary to Dimond and may not be used other than for the purpose of designing or building a roof or roofing system solely using products supplied or approved by Dimond ("Permitted Purpose"). You may copy this document solely for the Permitted Purpose, but may not otherwise copy, publish, distribute or modify this document without Dimond's prior written consent. Dimond will not be liable for any use of this document or information and specifications contained in this document, other than for the Permitted Purpose

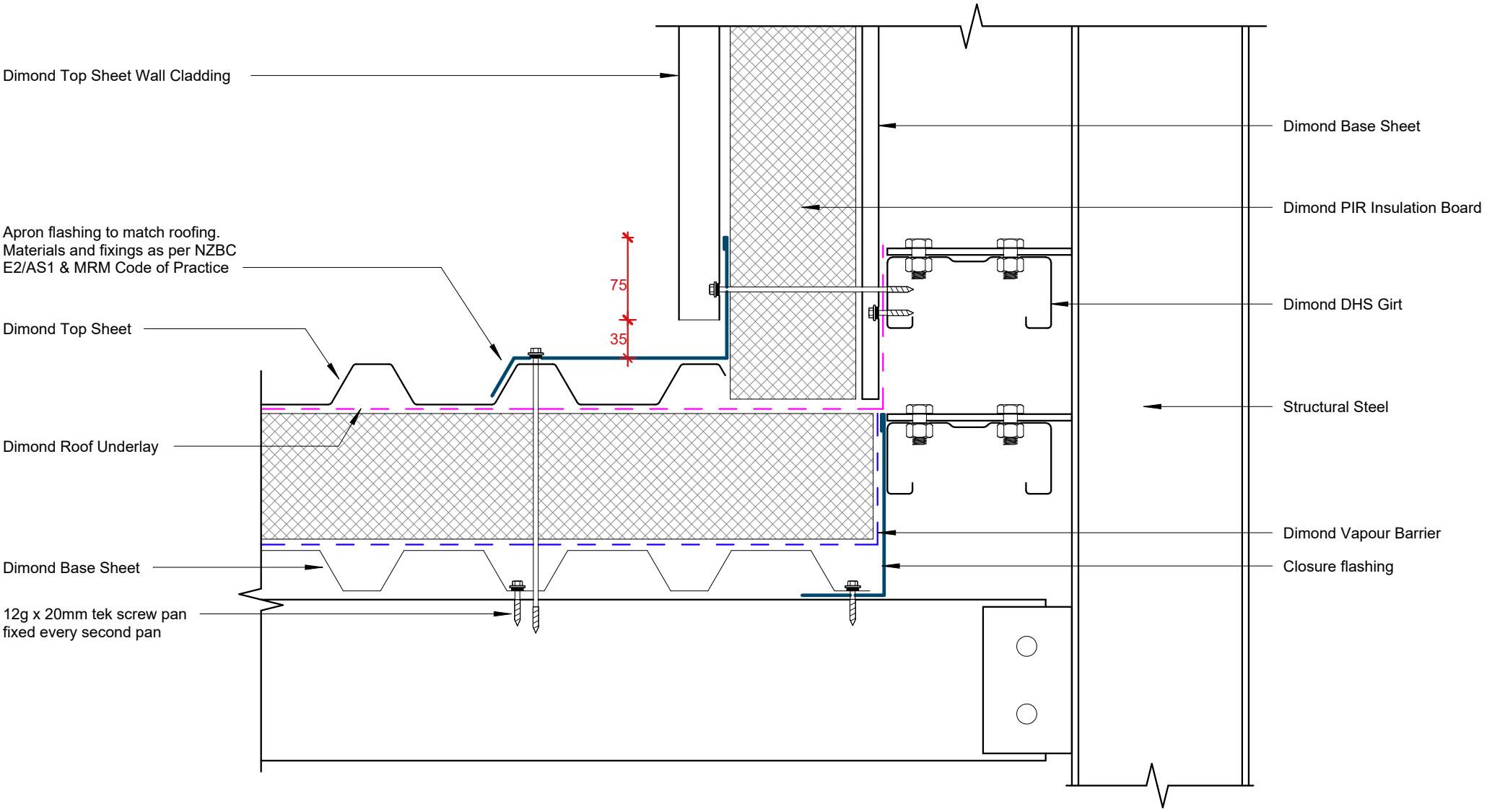

Wall to Roof Detail

Rev: 1 **Advanced Non-Vented Commerical Cladding**

Date: July 2026 Scale: 1 : 5 Sheet: **DARS_ANV_CC_04**

Dimond Roofing®

©Dimond 2023, all rights reserved. The information and specifications contained in this document are proprietary to Dimond and may not be used other than for the purpose of designing or building a roof or roofing system solely using products supplied or approved by Dimond ("Permitted Purpose"). You may copy this document solely for the Permitted Purpose, but may not otherwise copy, publish, distribute or modify this document without Dimond's prior written consent. Dimond will not be liable for any use of this document or information and specifications contained in this document, other than for the Permitted Purpose

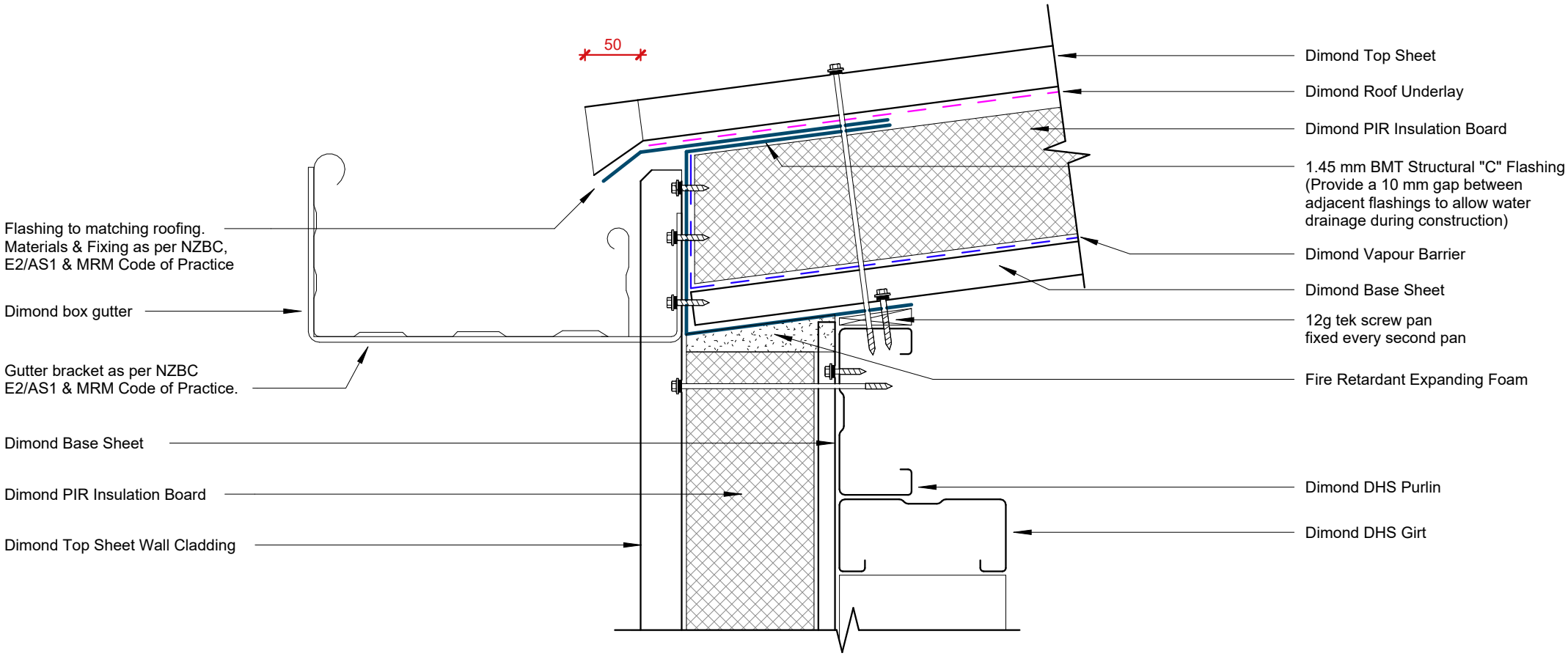

Box Gutter Detail

Rev: 1 **Advanced Non-Vented Commerical Cladding**

Dimond Roofing®

©Dimond 2023, all rights reserved. The information and specifications contained in this document are proprietary to Dimond and may not be used other than for the purpose of designing or building a roof or roofing system solely using products supplied or approved by Dimond ("Permitted Purpose"). You may copy this document solely for the Permitted Purpose, but may not otherwise copy, publish, distribute or modify this document without Dimond's prior written consent. Dimond will not be liable for any use of this document or information and specifications contained in this document, other than for the Permitted Purpose

Date: July 2026 Scale: 1 : 5 Sheet: **DARS_ANV_CC_05**

	COVER DIMENSIONS AS PER E2/AS1		
	SITUATION 1 Low, Meduim & High Wind Zones where roof pitch ≥ 10° **(Excludes any soft edge or turn-down)**	**SITUATION 2** All roof pitches in Very High zone. Low, Meduim & High Wind Zones where roof pitch ≤10° **(Excludes any soft edge or turn-down)**	**SITUATION 3** All roof pitches in Extra High wind zone **(Excludes any soft edge or turn-down)**
X	130mm MIN	200mm MIN	200mm MIN
Y	Cover at least two ribs (turned-up edge to full rib height constitutes a rib)		
Z	50mm MIN	70mm MIN	90mm MIN

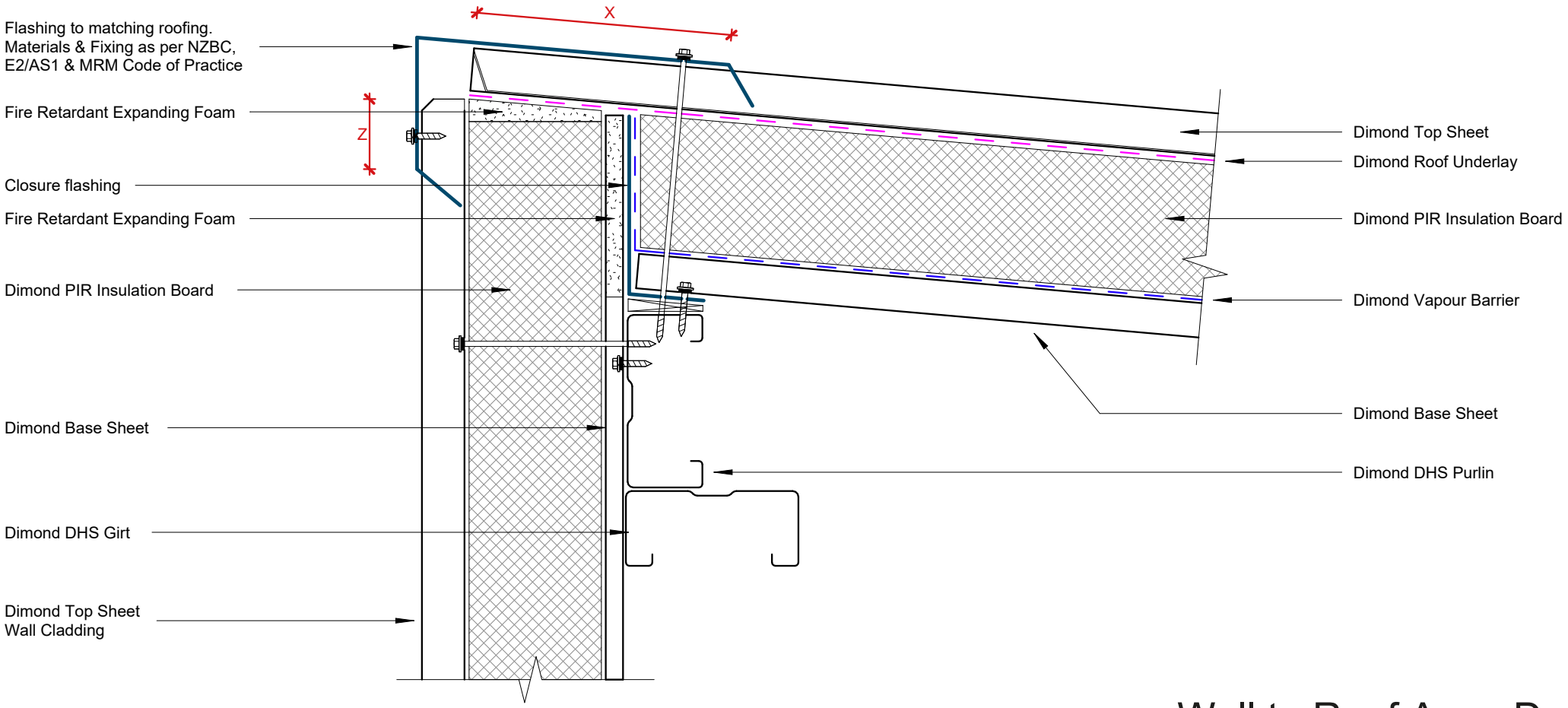

Wall to Roof Apex Detail

Rev: 1 **Advanced Non-Vented Commerical Cladding**

Date: July 2026 Scale: 1 : 5 Sheet: **DARS_ANV_CC_06**

Dimond Roofing®

©Dimond 2023, all rights reserved. The information and specifications contained in this document are proprietary to Dimond and may not be used other than for the purpose of designing or building a roof or roofing system solely using products supplied or approved by Dimond ("Permitted Purpose"). You may copy this document solely for the Permitted Purpose, but may not otherwise copy, publish, distribute or modify this document without Dimond's prior written consent. Dimond will not be liable for any use of this document or information and specifications contained in this document, other than for the Permitted Purpose

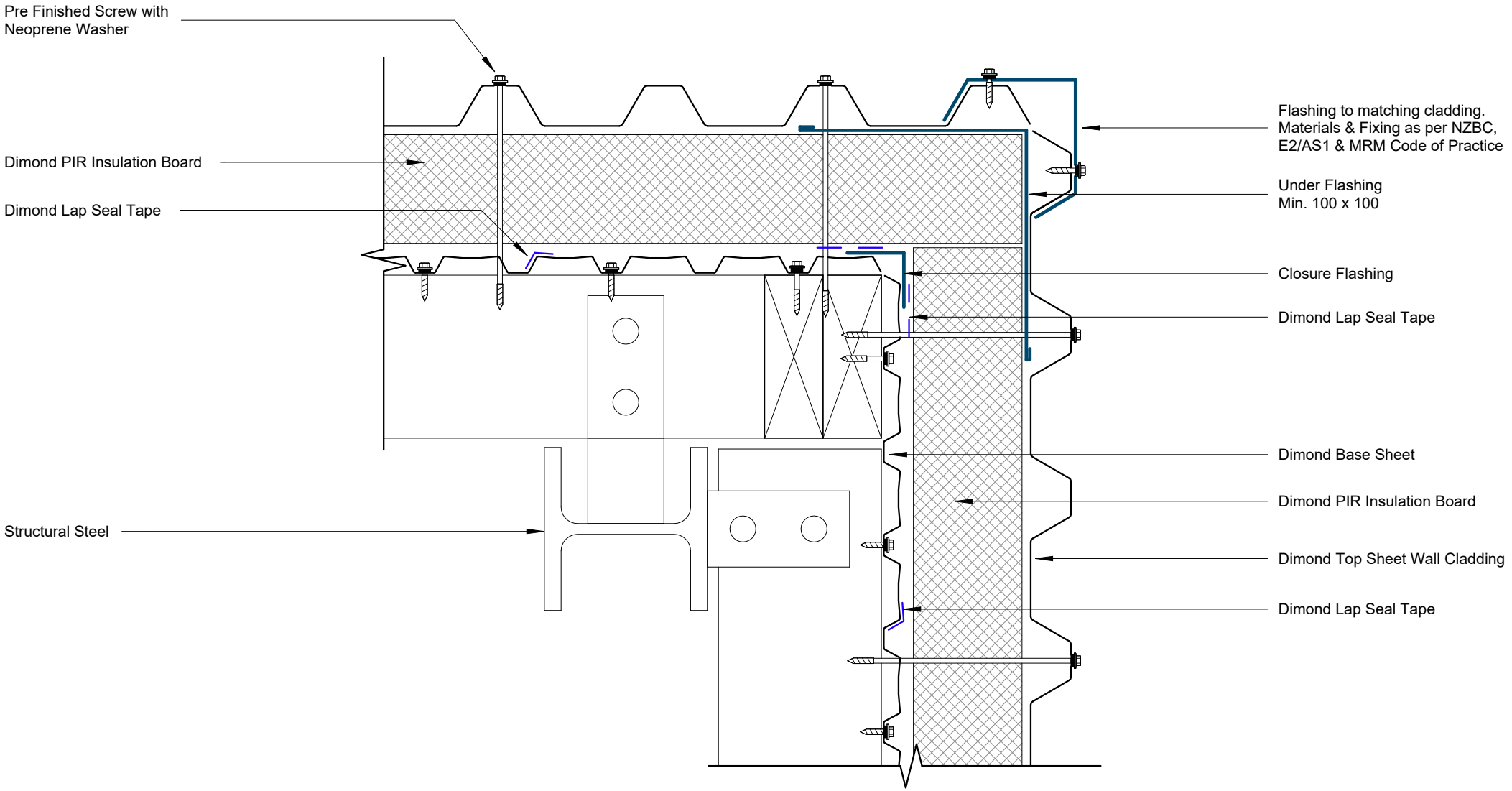

External Corner Detail

Rev: 1 **Advanced Non-Vented Commerical Cladding**

Dimond Roofing®

©Dimond 2023, all rights reserved. The information and specifications contained in this document are proprietary to Dimond and may not be used other than for the purpose of designing or building a roof or roofing system solely using products supplied or approved by Dimond ("Permitted Purpose"). You may copy this document solely for the Permitted Purpose, but may not otherwise copy, publish, distribute or modify this document without Dimond's prior written consent. Dimond will not be liable for any use of this document or information and specifications contained in this document, other than for the Permitted Purpose

Date: July 2026 Scale: 1 : 5 Sheet: **DARS_ANV_CC_07**

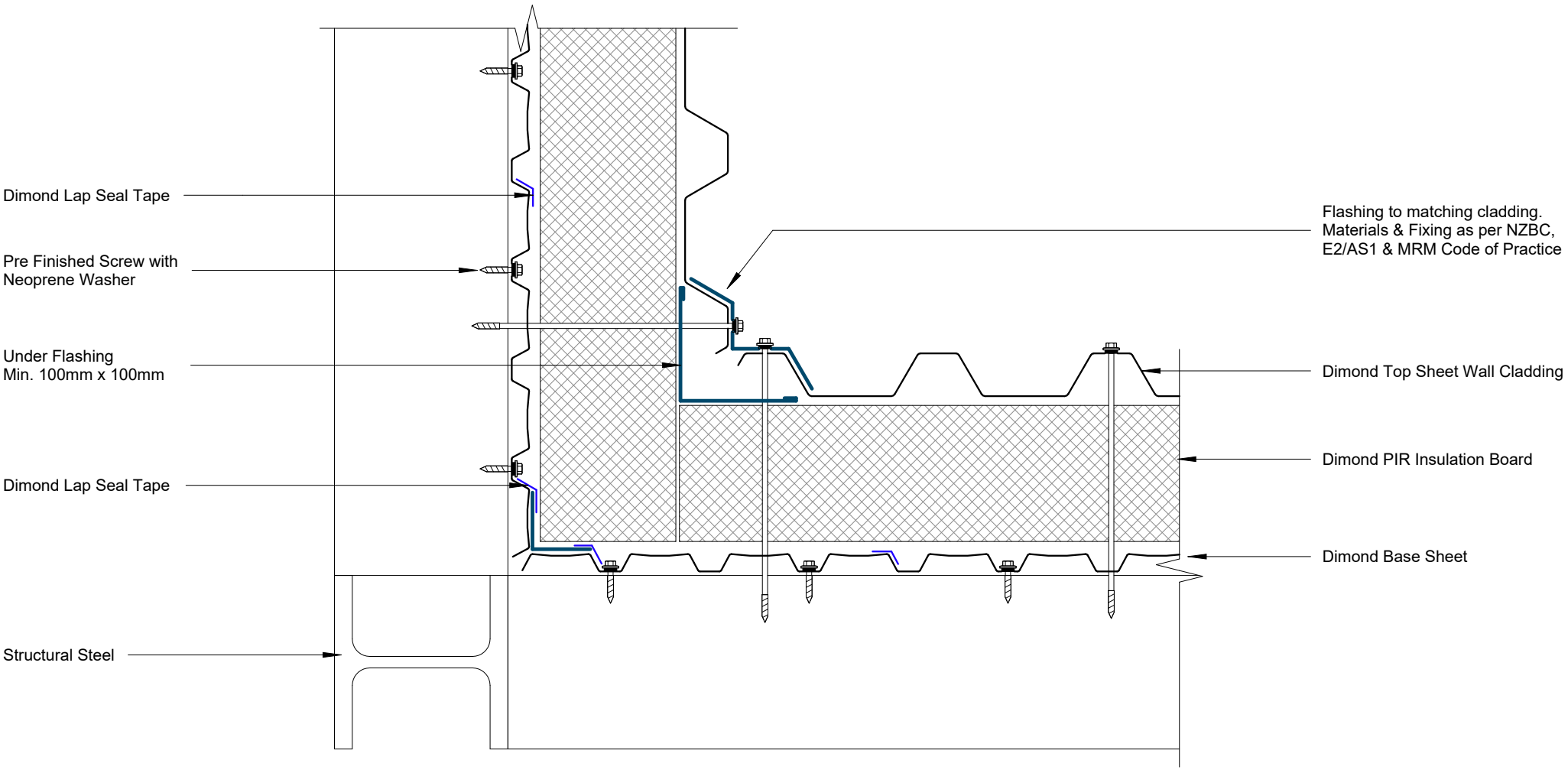

Internal Corner Detail

Rev: 1 **Advanced Non-Vented Commerical Cladding**

Dimond Roofing®

©Dimond 2023, all rights reserved. The information and specifications contained in this document are proprietary to Dimond and may not be used other than for the purpose of designing or building a roof or roofing system solely using products supplied or approved by Dimond ("Permitted Purpose"). You may copy this document solely for the Permitted Purpose, but may not otherwise copy, publish, distribute or modify this document without Dimond's prior written consent. Dimond will not be liable for any use of this document or information and specifications contained in this document, other than for the Permitted Purpose

Date: July 2026 Scale: 1 : 5 Sheet: **DARS_ANV_CC_08**

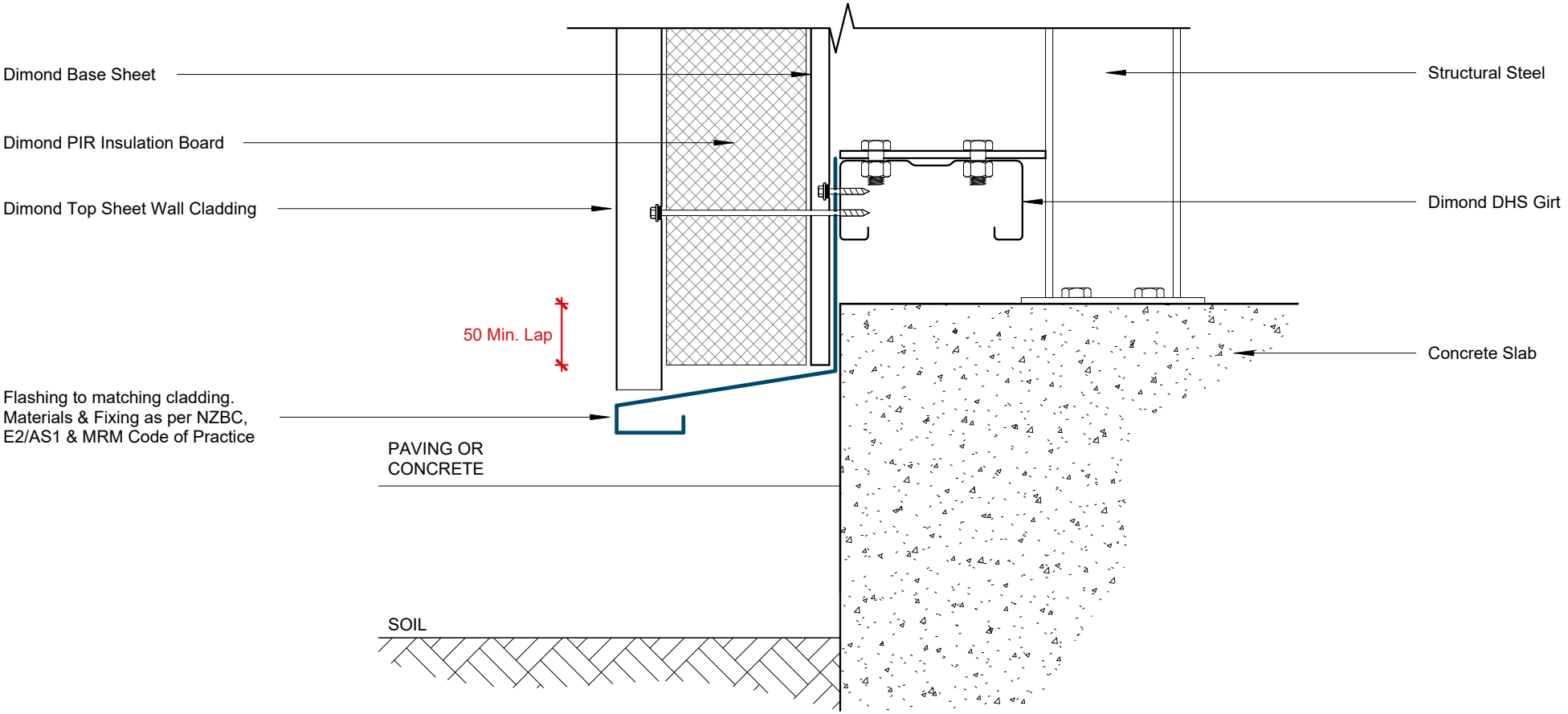

Base Detail

Rev: 1 **Advanced Non-Vented Commerical Cladding**

Date: July 2026 Scale: 1 : 5 Sheet: **DARS_ANV_CC_09**

Dimond Roofing®

©Dimond 2023, all rights reserved. The information and specifications contained in this document are proprietary to Dimond and may not be used other than for the purpose of designing or building a roof or roofing system solely using products supplied or approved by Dimond ("Permitted Purpose"). You may copy this document solely for the Permitted Purpose, but may not otherwise copy, publish, distribute or modify this document without Dimond's prior written consent. Dimond will not be liable for any use of this document or information and specifications contained in this document, other than for the Permitted Purpose

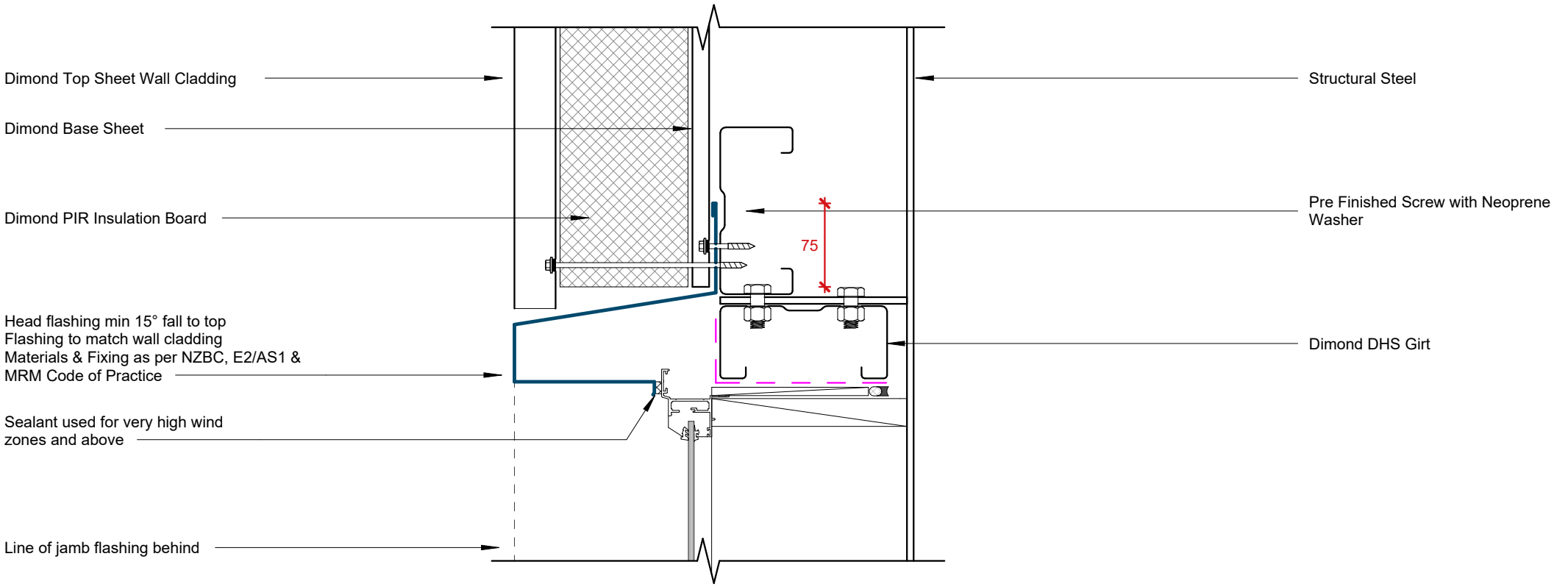

Window/Door Head Detail

Rev: 1 **Advanced Non-Vented Commerical Cladding**

Dimond Roofing®

©Dimond 2023, all rights reserved. The information and specifications contained in this document are proprietary to Dimond and may not be used other than for the purpose of designing or building a roof or roofing system solely using products supplied or approved by Dimond ("Permitted Purpose"). You may copy this document solely for the Permitted Purpose, but may not otherwise copy, publish, distribute or modify this document without Dimond's prior written consent. Dimond will not be liable for any use of this document or information and specifications contained in this document, other than for the Permitted Purpose

Date: July 2026 Scale: 1 : 5 Sheet: **DARS_ANV_CC_10**

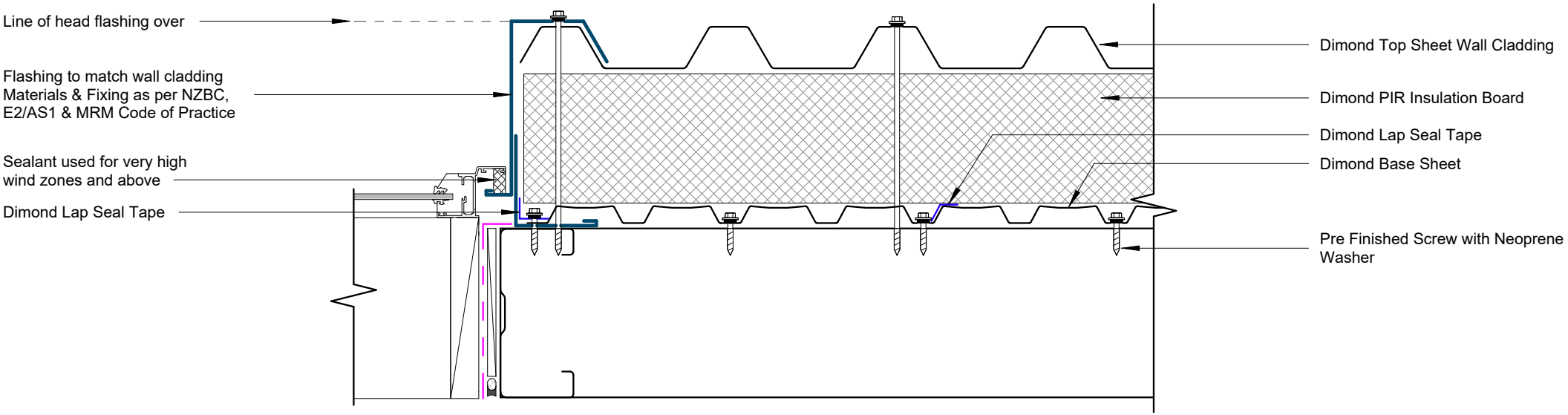

Window/Door Jamb Detail

Rev: 1 **Advanced Non-Vented Commerical Cladding**

Dimond Roofing®

©Dimond 2023, all rights reserved. The information and specifications contained in this document are proprietary to Dimond and may not be used other than for the purpose of designing or building a roof or roofing system solely using products supplied or approved by Dimond ("Permitted Purpose"). You may copy this document solely for the Permitted Purpose, but may not otherwise copy, publish, distribute or modify this document without Dimond's prior written consent. Dimond will not be liable for any use of this document or information and specifications contained in this document, other than for the Permitted Purpose

Date: July 2026 Scale: 1 : 5 Sheet: **DARS_ANV_CC_11**

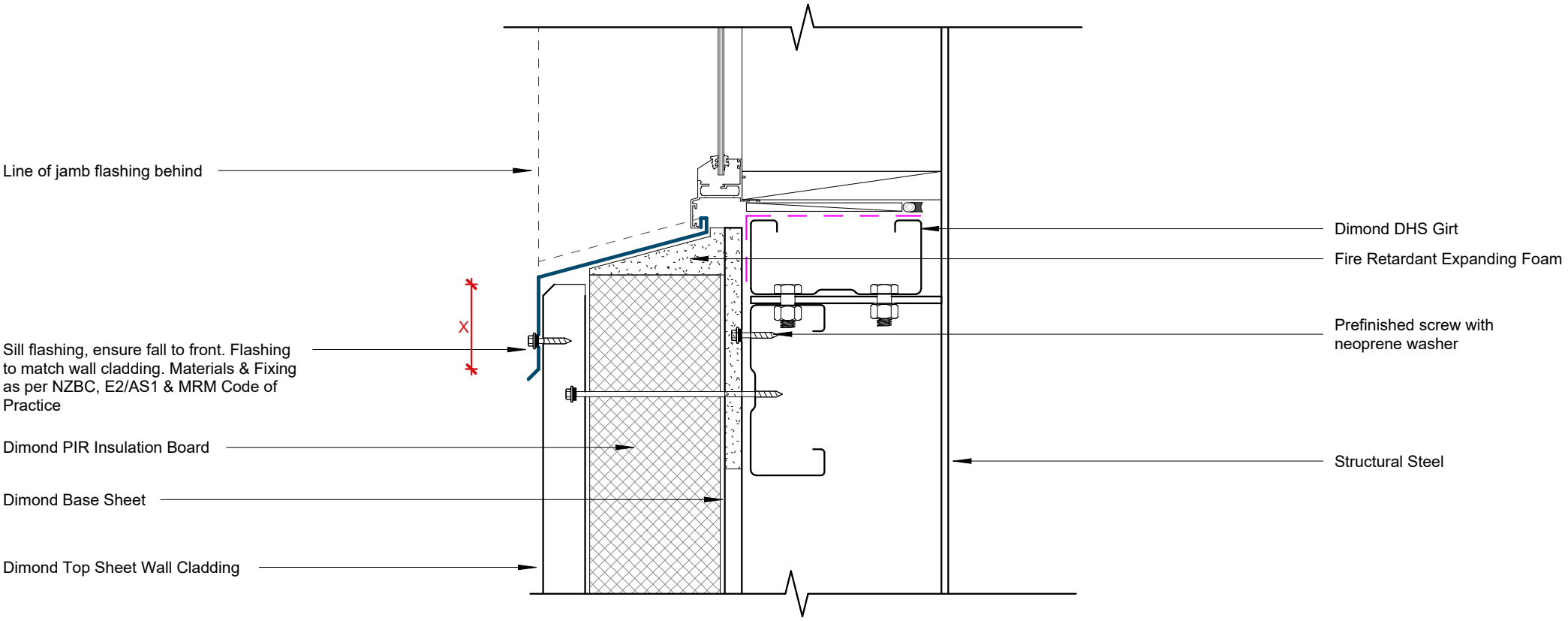

Window Sill Detail

Rev: 1 **Advanced Non-Vented Commerical Cladding**

Date: July 2026 Scale: 1 : 5 Sheet: **DARS_ANV_CC_12**

Dimond Roofing®

©Dimond 2023, all rights reserved. The information and specifications contained in this document are proprietary to Dimond and may not be used other than for the purpose of designing or building a roof or roofing system solely using products supplied or approved by Dimond ("Permitted Purpose"). You may copy this document solely for the Permitted Purpose, but may not otherwise copy, publish, distribute or modify this document without Dimond's prior written consent. Dimond will not be liable for any use of this document or information and specifications contained in this document, other than for the Permitted Purpose

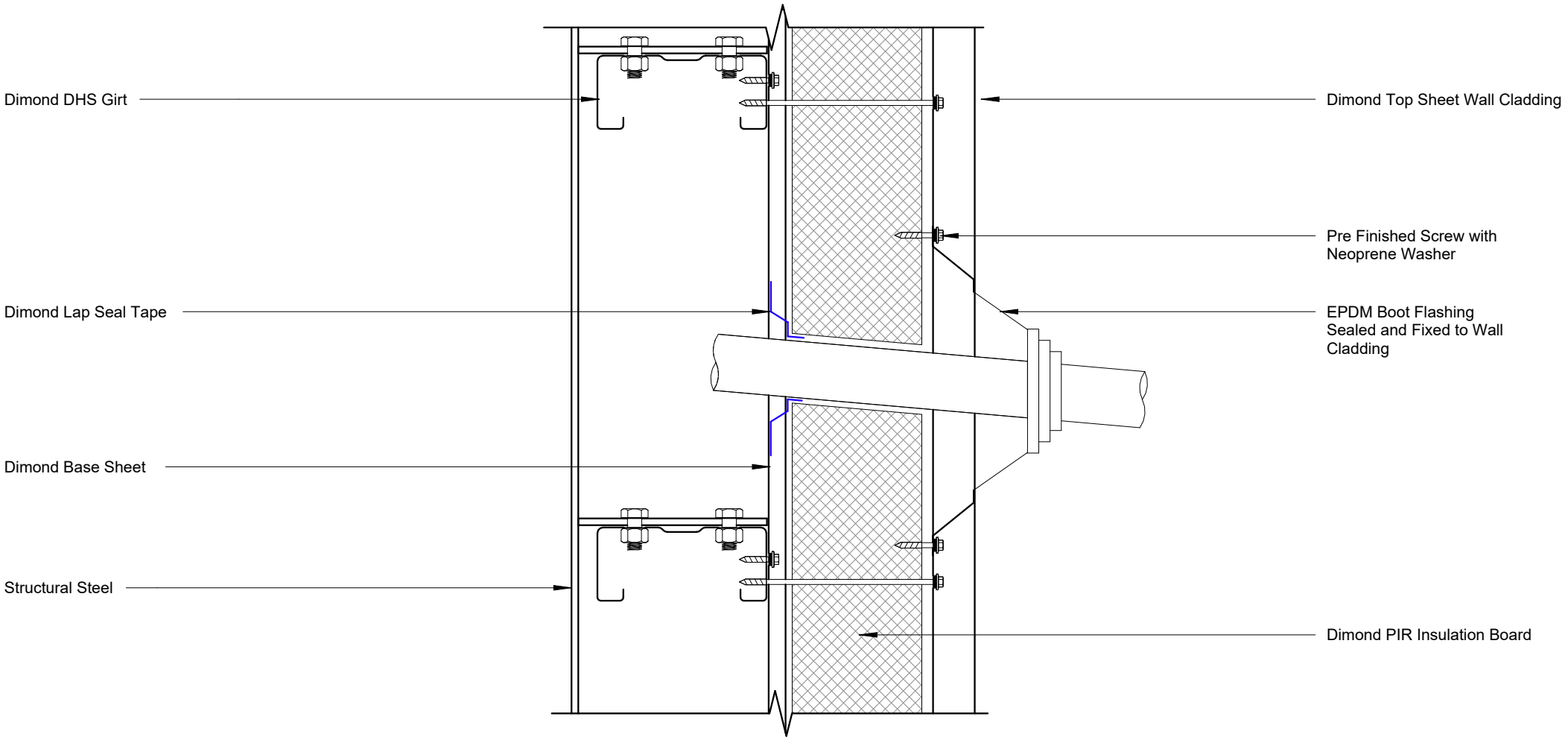

Pipe Penetration Detail

Rev: 1 **Advanced Non-Vented Commerical Cladding**

Dimond Roofing®

©Dimond 2023, all rights reserved. The information and specifications contained in this document are proprietary to Dimond and may not be used other than for the purpose of designing or building a roof or roofing system solely using products supplied or approved by Dimond ("Permitted Purpose"). You may copy this document solely for the Permitted Purpose, but may not otherwise copy, publish, distribute or modify this document without Dimond's prior written consent. Dimond will not be liable for any use of this document or information and specifications contained in this document, other than for the Permitted Purpose

Date: July 2026 Scale: 1 : 5 Sheet: **DARS_ANV_CC_13**

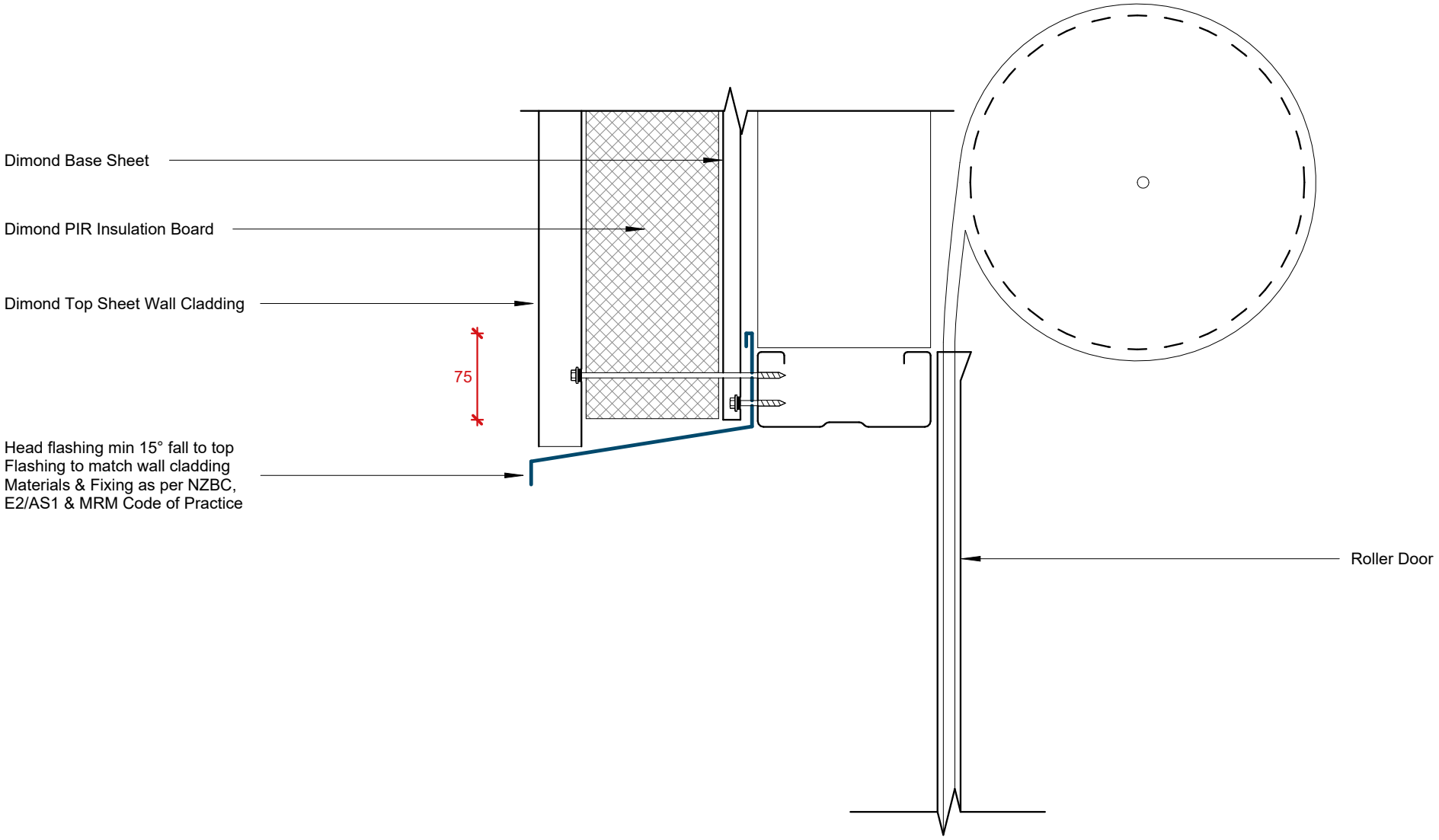

Roller Door Head Detail

Rev: 1 **Advanced Non-Vented Commerical Cladding**

Dimond Roofing®

©Dimond 2023, all rights reserved. The information and specifications contained in this document are proprietary to Dimond and may not be used other than for the purpose of designing or building a roof or roofing system solely using products supplied or approved by Dimond ("Permitted Purpose"). You may copy this document solely for the Permitted Purpose, but may not otherwise copy, publish, distribute or modify this document without Dimond's prior written consent. Dimond will not be liable for any use of this document or information and specifications contained in this document, other than for the Permitted Purpose

Date: July 2026 Scale: 1 : 5 Sheet: **DARS_ANV_CC_14**

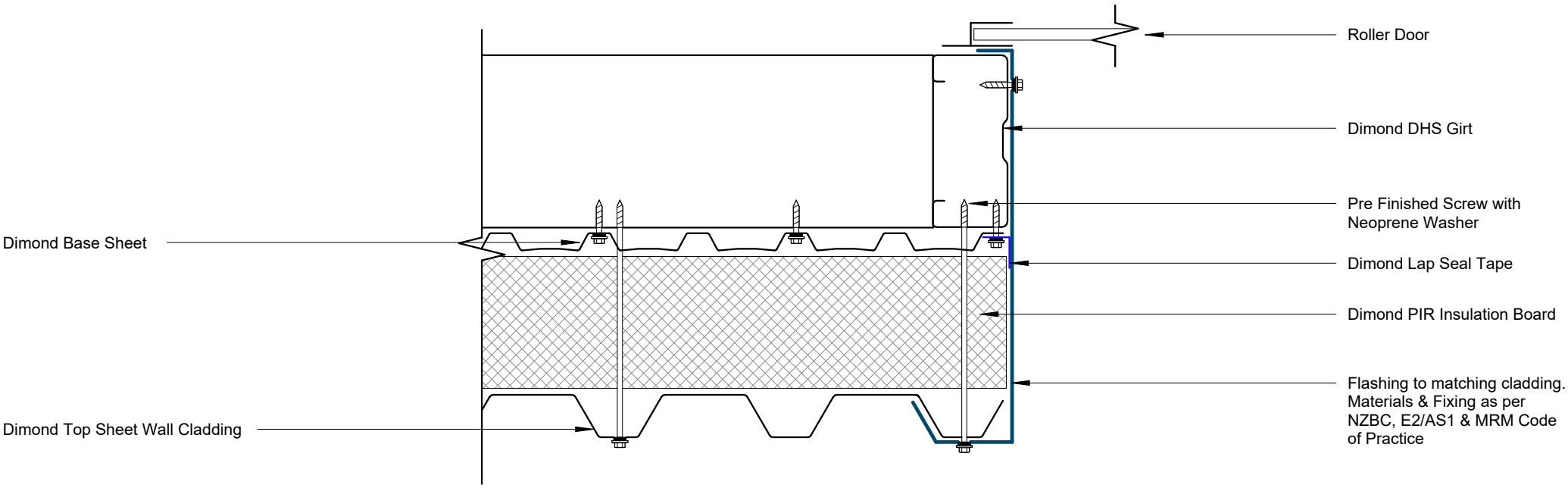

Roller Door Jamb Detail

Rev: 1 **Advanced Non-Vented Commerical Cladding**

Date: July 2026 Scale: 1 : 5 Sheet: **DARS_ANV_CC_15**

Dimond Roofing®

©Dimond 2023, all rights reserved. The information and specifications contained in this document are proprietary to Dimond and may not be used other than for the purpose of designing or building a roof or roofing system solely using products supplied or approved by Dimond ("Permitted Purpose"). You may copy this document solely for the Permitted Purpose, but may not otherwise copy, publish, distribute or modify this document without Dimond's prior written consent. Dimond will not be liable for any use of this document or information and specifications contained in this document, other than for the Permitted Purpose

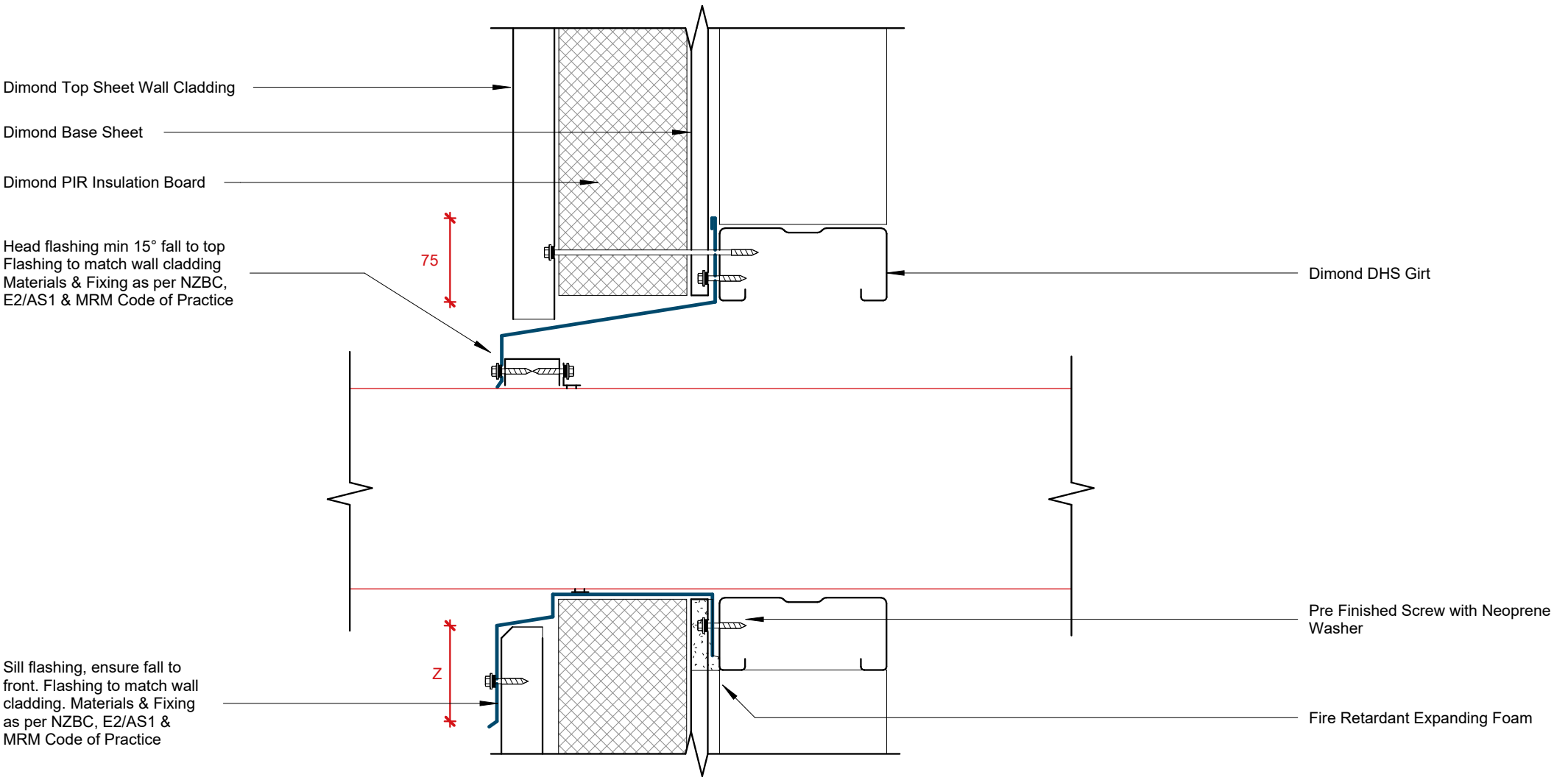

Square Penetration Head and Sil Details

Rev: 1 **Advanced Non-Vented Commerical Cladding**

Dimond Roofing®

©Dimond 2023, all rights reserved. The information and specifications contained in this document are proprietary to Dimond and may not be used other than for the purpose of designing or building a roof or roofing system solely using products supplied or approved by Dimond ("Permitted Purpose"). You may copy this document solely for the Permitted Purpose, but may not otherwise copy, publish, distribute or modify this document without Dimond's prior written consent. Dimond will not be liable for any use of this document or information and specifications contained in this document, other than for the Permitted Purpose

Date: July 2026 Scale: 1 : 5 Sheet: **DARS_ANV_CC_16**

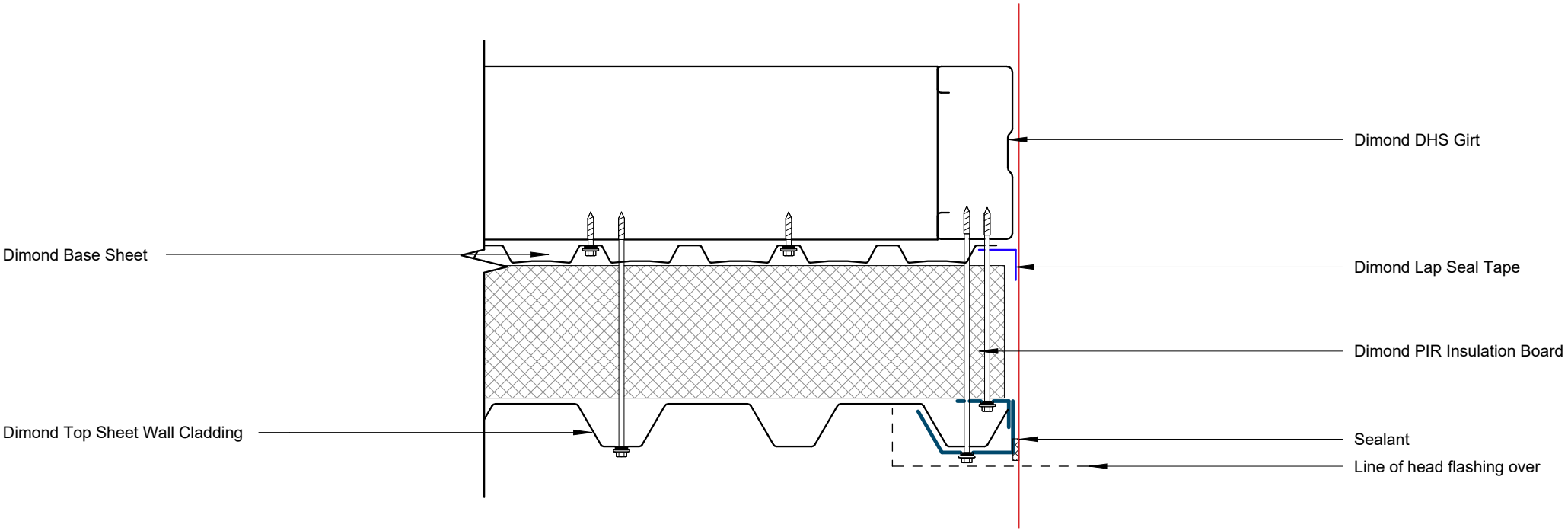

Square Penetration Jamb Detail

Rev: 1 **Advanced Non-Vented Commerical Cladding**

Dimond Roofing®

©Dimond 2023, all rights reserved. The information and specifications contained in this document are proprietary to Dimond and may not be used other than for the purpose of designing or building a roof or roofing system solely using products supplied or approved by Dimond ("Permitted Purpose"). You may copy this document solely for the Permitted Purpose, but may not otherwise copy, publish, distribute or modify this document without Dimond's prior written consent. Dimond will not be liable for any use of this document or information and specifications contained in this document, other than for the Permitted Purpose

Date: July 2026 Scale: 1 : 5 Sheet: **DARS_ANV_CC_17**